P flows in the Netherlands: options for a more sustainable use

A.L. Smit, J.C. van Middelkoop, W. van Dijk,
H. van Reuler, A.J. de Buck, P.A.C.M. van de Sanden

WAGENINGEN UR
For quality of life

Introduction

- P prerequisite of life on earth
- Plant available P a growth limiting factor on most soils and in most waters
- Rock phosphate: finite resource
  - Only a few locations (Morocco and China)
  - Quality of P-deposits declines (grade, heavy metals, radioactivity, mining problems)
  - Increasing demand (population, diet, biofuels)
  - Apparent low efficiency “from mine to fork” (only 20%)
  - No governance

Introduction (2)

- Despite a looming crisis, a non-sustainable use of phosphorus:
  - Losses (erosion, run-off, leaching)
  - Accumulation (e.g. NL) vs. depletion (Africa)
  - Non-sustainable use of manure, lack of recycling
  - Environmental problems like eutrophication
- Wrongful use of available resources
  - large P deficient areas (e.g. Africa) with minimal use of mineral P fertilizer

Objectives of the study

- Quantification of national P flows
- Which flows are worthwhile to address
  - Recycling
  - Improve efficiency
  - Losses to environment
  - Etc.

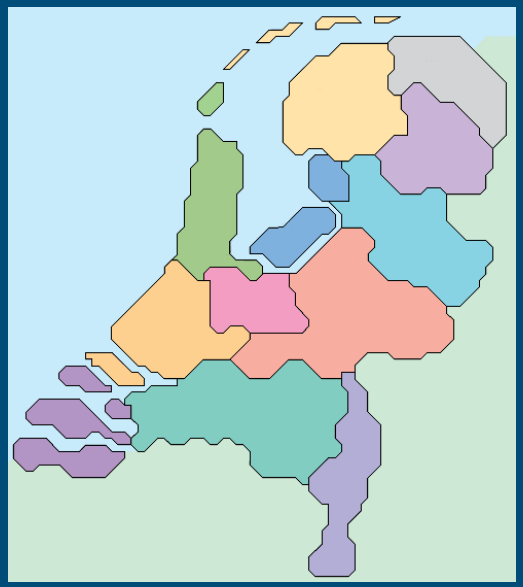

Materials and Methods

- Material Flow Analysis
- System boundaries
  - food and non-food production and consumption incl. waste
- Data collection
  - national statistics
  - literature
  - personal communications

Results: Flows of P, total scheme

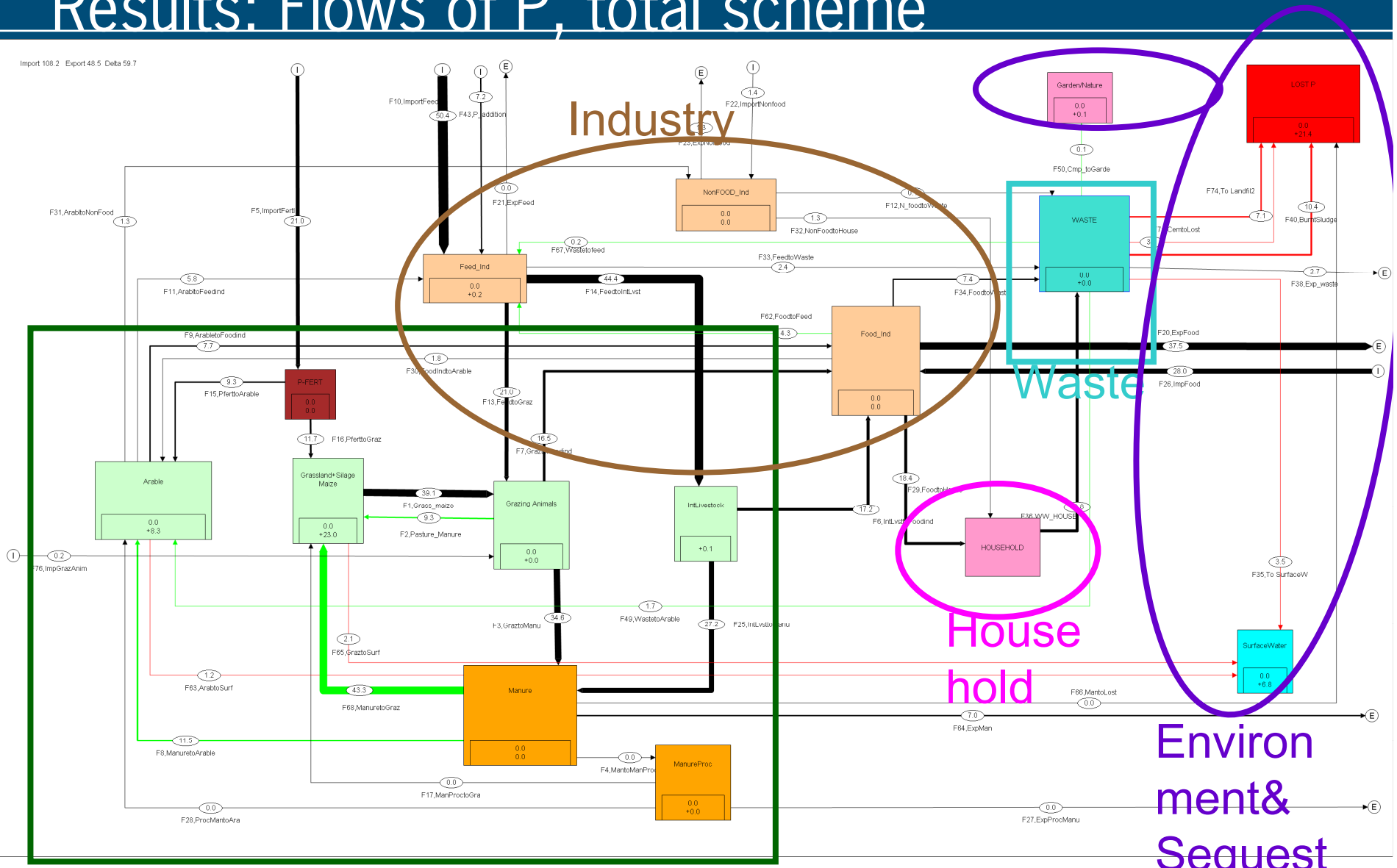

WAGENINGEN UR
For quality of life

Results: Flows of P, Waste scheme

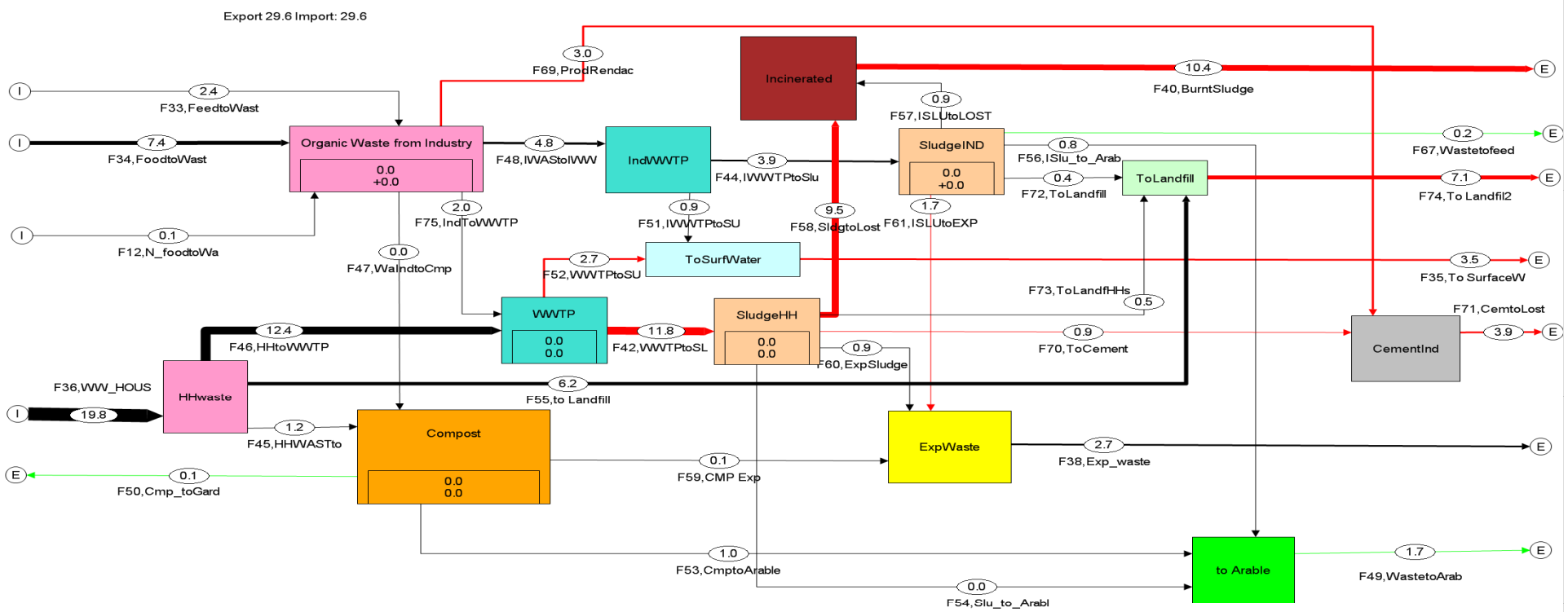

summary 2005, values in Gg/a = Mkg/a = million kg P/a

Import: 110 Gg/a Export: 48 Gg/a dStock: 60 Gg/a

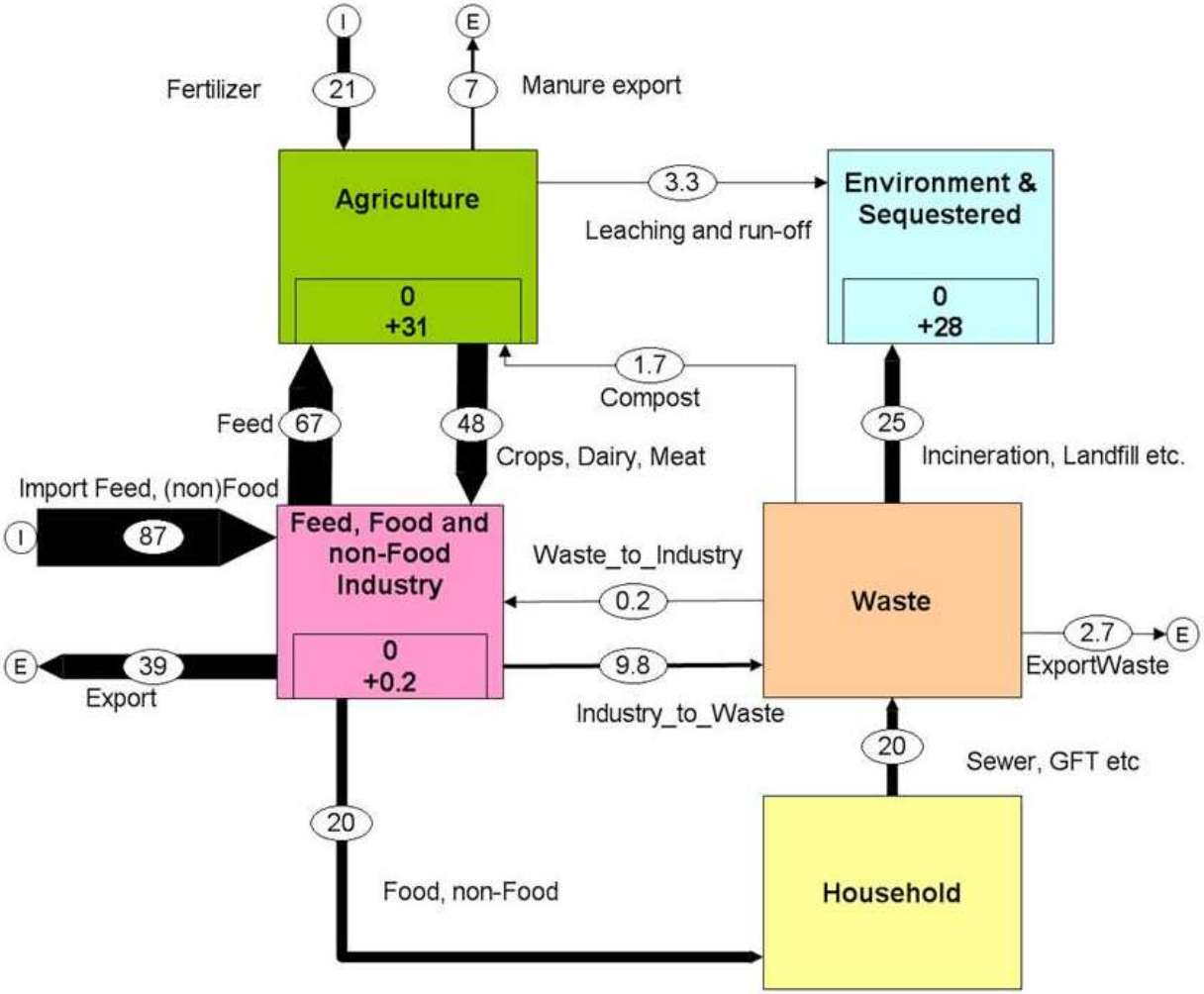

WAGENINGEN UR
For quality of life

Possibilities for more sustainable use of P

- Recycle
  - Missed opportunities
  - Accumulation in agriculture
  - Losses to environment

Possibilities for more sustainable use of P

- Missed opportunities
  - sewer sludge
  - slaughter waste and untimely deceased animals

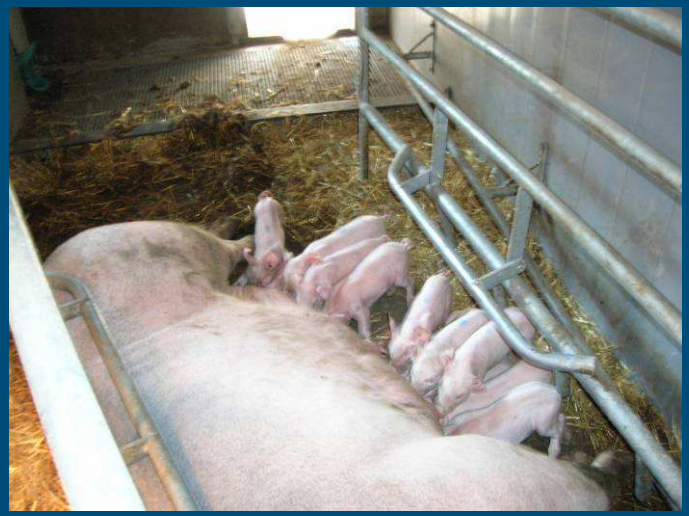

Possibilities for more sustainable use of P

- Agriculture
  - legislation
  - animal nutrition
  - fertilizer recommendations
  - manure surplus : processing ? stocking rate reduction ? export ?
  - Low Phytic Acid variaties ?

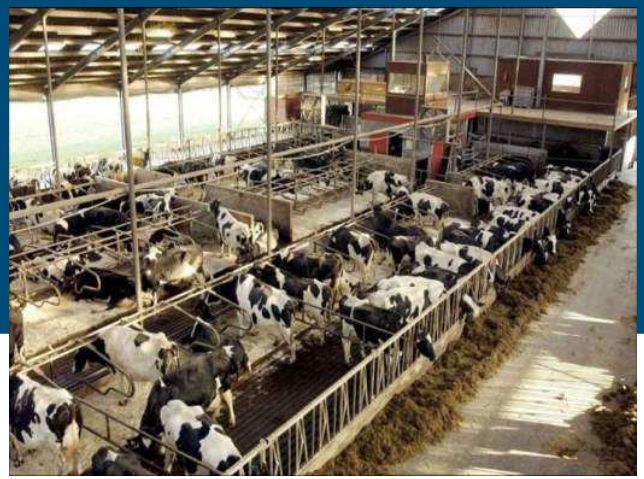

Possibilities for more sustainable use of P

- Losses to environment
  - agriculture
  - waste water treatment

Continuation

- scenarios
- EU study (Bert Smit)
- the big picture (mondial)
- PhD: Sheida Sattari at Wageningen University
  - Impact of future P-scarcity on food security

Thank you for your attention

© Wageningen UR

WAGENINGEN UR
For quality of life